LATCHES AND FLIP-FLOPS

SEQUENTIAL LOGIC

prepared by:

Gyro A. Madrona

Electronics Engineer

GRADING SYSTEM

FINAL GRADE

30%

PRELIM

30%

MIDTERM

40%

ENDTERM

TERM GRADE

50%

WEEKLY

50%

EXAM

100%

LABORATORY

PENALTY

0

ABSENT

3

45-min LATE

5 max

15-min LATE

TOPIC OUTLINE

Latches

- S-R Latch
- D Latch

Flip-Flops

- D Flip-Flop
- J-K Flip-Flop

LATCHES

COMBINATIONAL VS SEQUENTIAL

Combinational Logic

Output depends on **present** input only

Does not have memory

- Half-Adders
- Full-Adders
- Multiplexers
- Demultiplexers
- Decoders

Sequential Logic

Output depends on **present** and **past**

Has a **memory**

- Clocks
- Flip-Flops
- Bi-stables
- Counters
- Registers

LATCH

"To get **hold** of"

The latch is a type of **temporary storage** device that has two stable states (bistable)

S-R LATCH

Logic Diagram

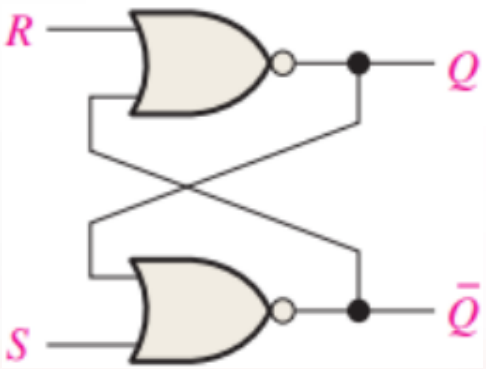

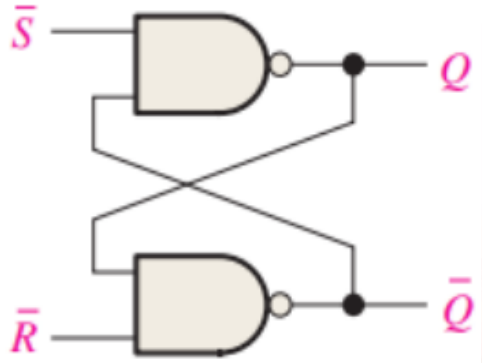

Logic Symbol

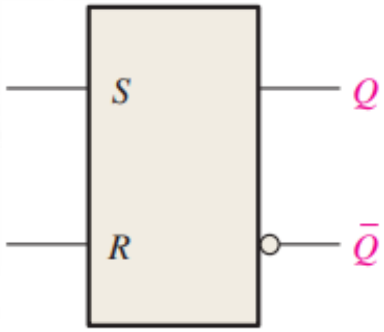

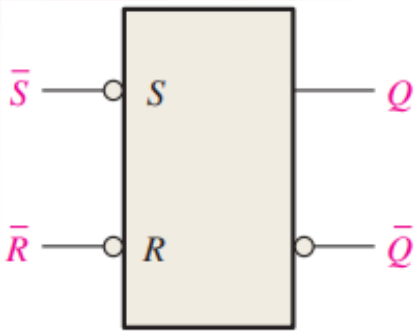

Truth Table [Active **LOW**]

Inputs		Outputs		Comments
$\bar{S}$	$\bar{R}$	Q	$\bar{Q}$	
1	1	NC	NC	No Change
0	**1**	**1**	**0**	Latch **SET**
1	**0**	**0**	**1**	Latch **RESET**
0	0	1	1	Invalid Condition

GATED S-R LATCH

Logic Diagram

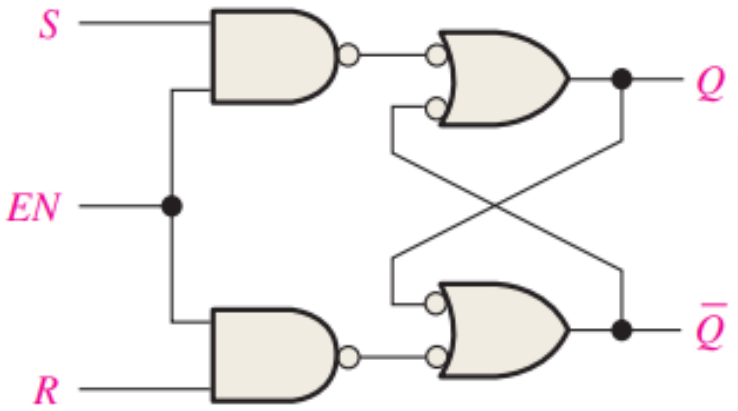

Timing Diagram

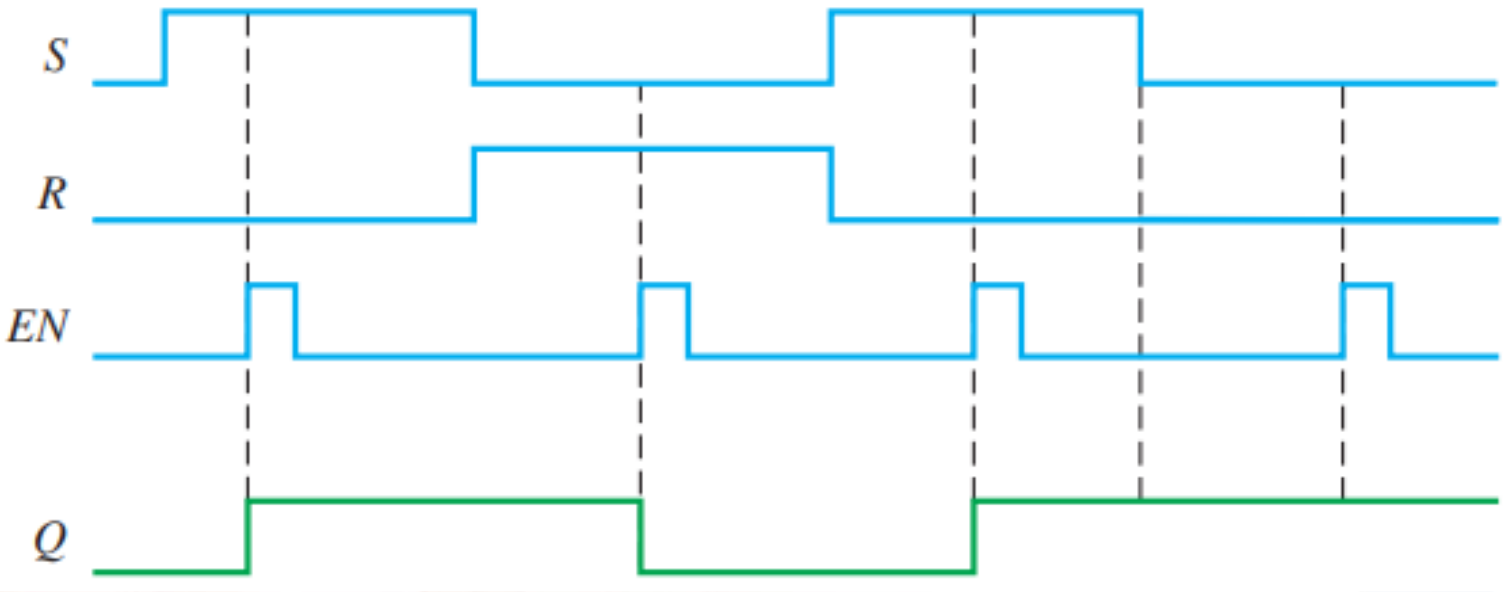

Logic Symbol

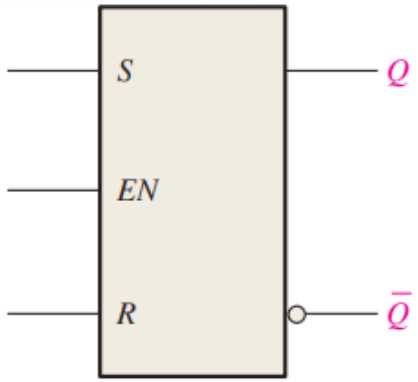

GATED D LATCH

Logic Diagram

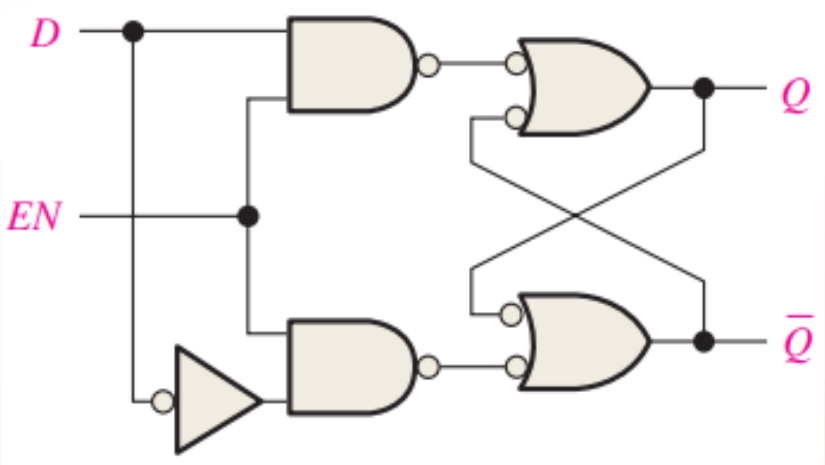

Timing Diagram

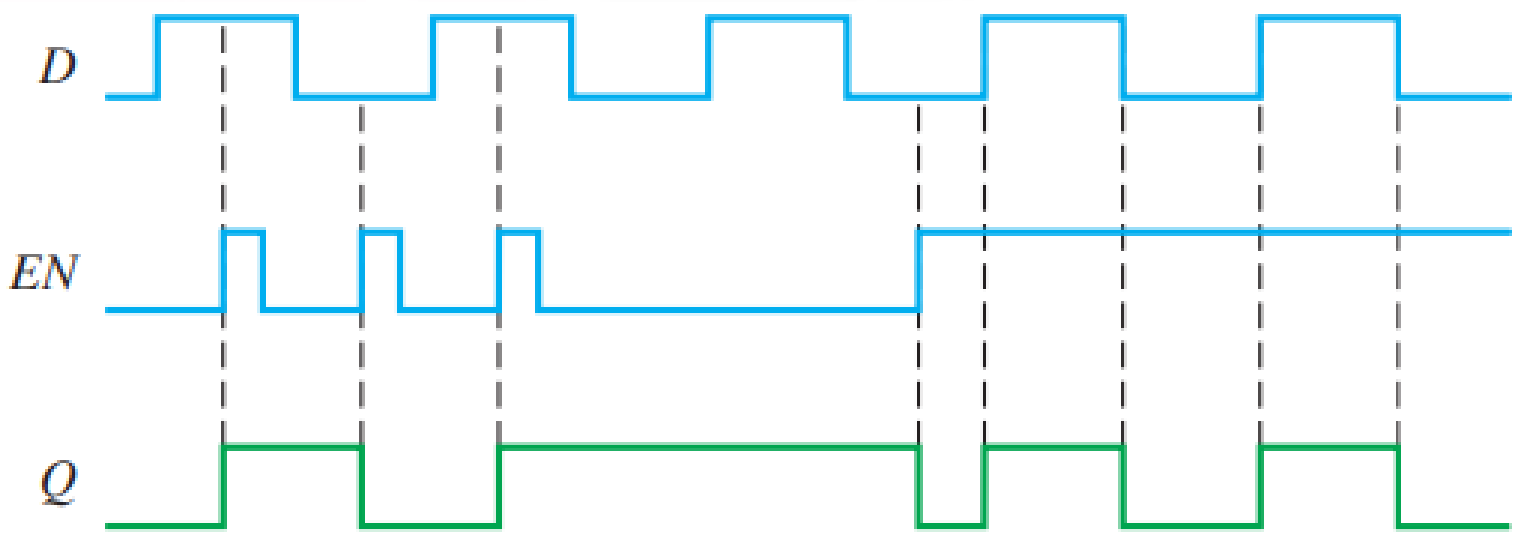

Logic Symbol

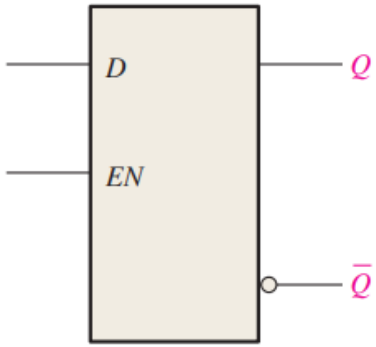

FLIP-FLOPS

Flip-flops are synchronous bistable devices. **Synchronous** means that the output changes state only at a specified point (leading or trailing edge) on the triggering input called the clock (**CLK**)

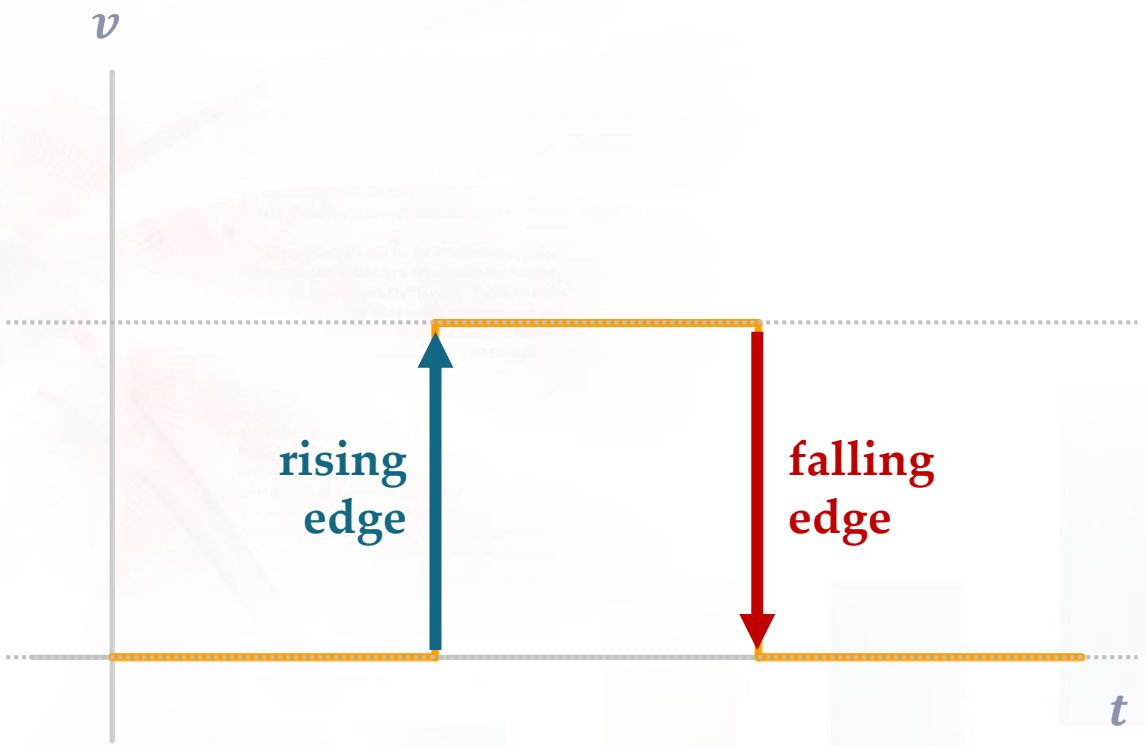

Logic Diagram

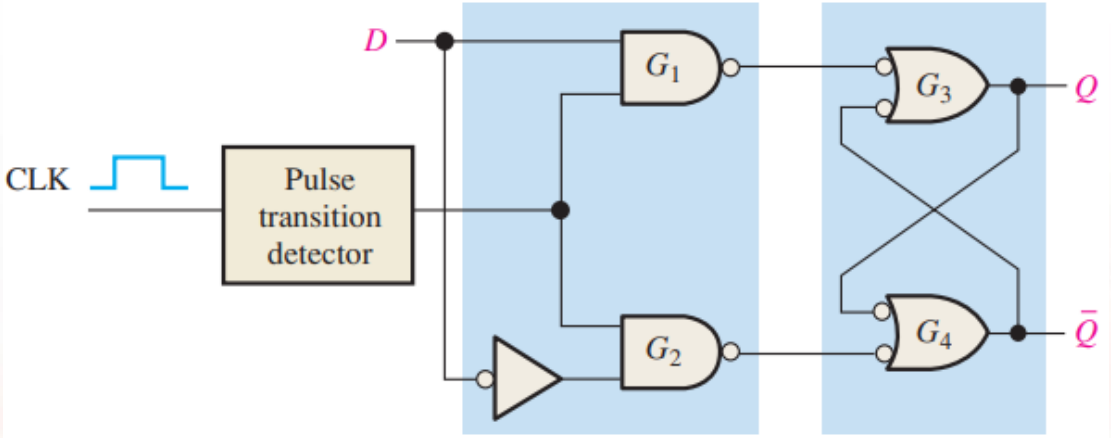

Truth Table [**Positive** Edge-Triggered]

Inputs		Outputs		Comments
D	CLK	Q	$\bar{Q}$	
0	↑	**0**	1	**RESET**
1	↑	**1**	0	**SET**

Logic Symbol

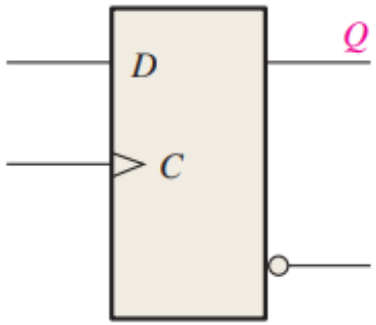

EXERCISE

Determine the **Q** and $\overline{Q}$ output waveforms of the flip-flop below, given its **D** and **CLK** inputs waveform. Assume that the positive edge-triggered flip-flop is initially **RESET**.

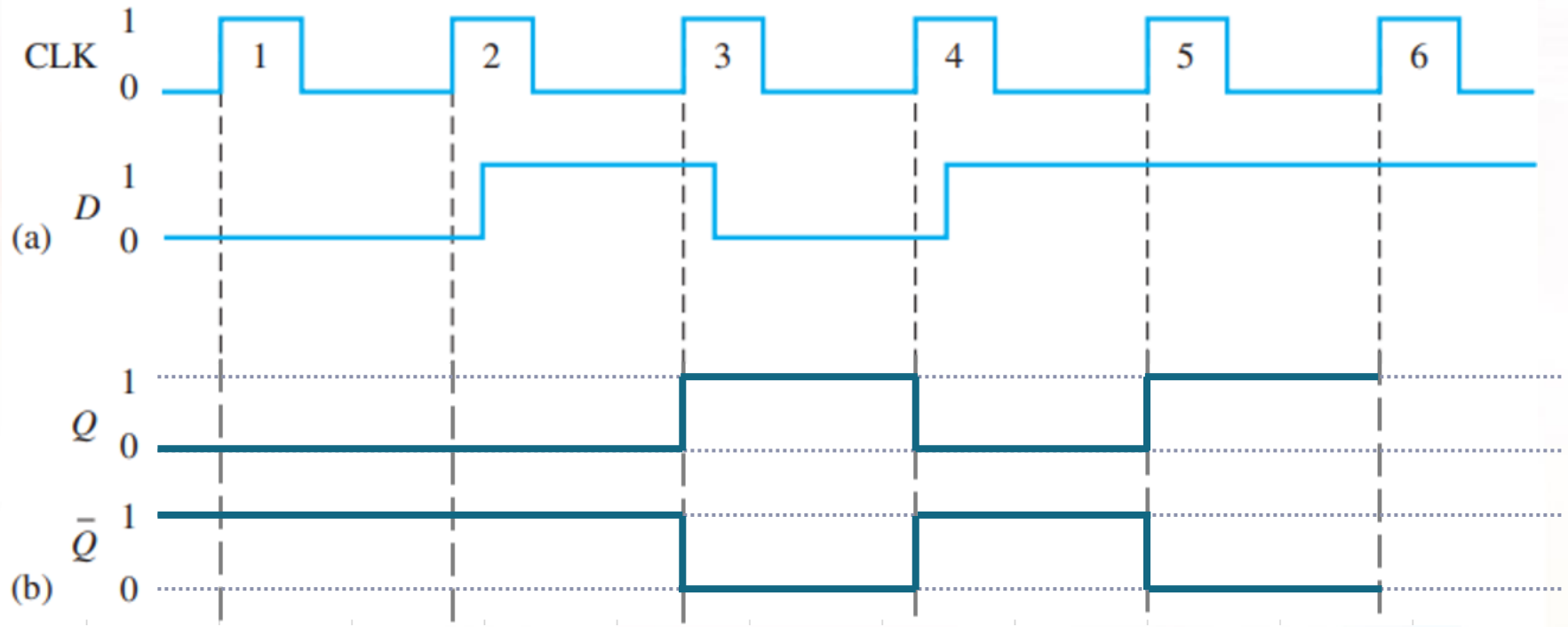

J-K FLIP-FLOP

Logic Diagram

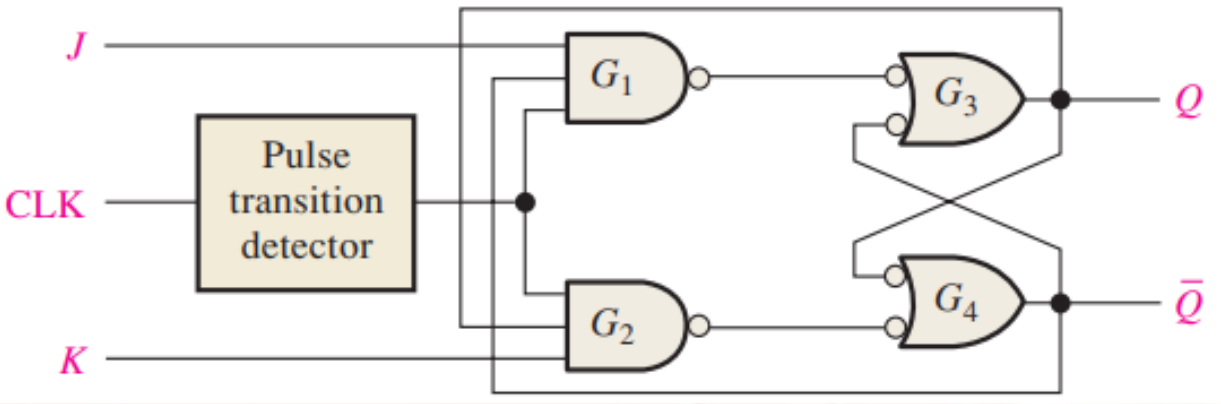

Truth Table [**Positive** Edge-Triggered]

Inputs			Outputs		Comments
J	K	CLK	Q	$\overline{Q}$	
0	0	↑	Q_0	$\overline{Q_0}$	No Change
0	**1**	↑	**0**	1	**RESET**
1	0	↑	**1**	0	**SET**
1	1	↑	$\overline{Q_0}$	Q_0	Toggle

Logic Symbol

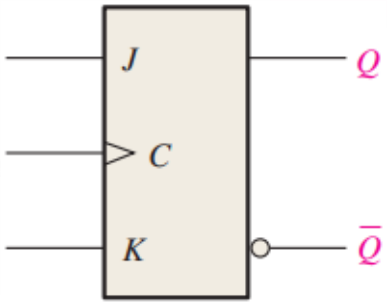

EXERCISE

The waveforms given are applied to the **J**, **K**, and **clock** inputs as indicated. Determine the **Q** output, assuming that flip-flop is initially **RESET**.

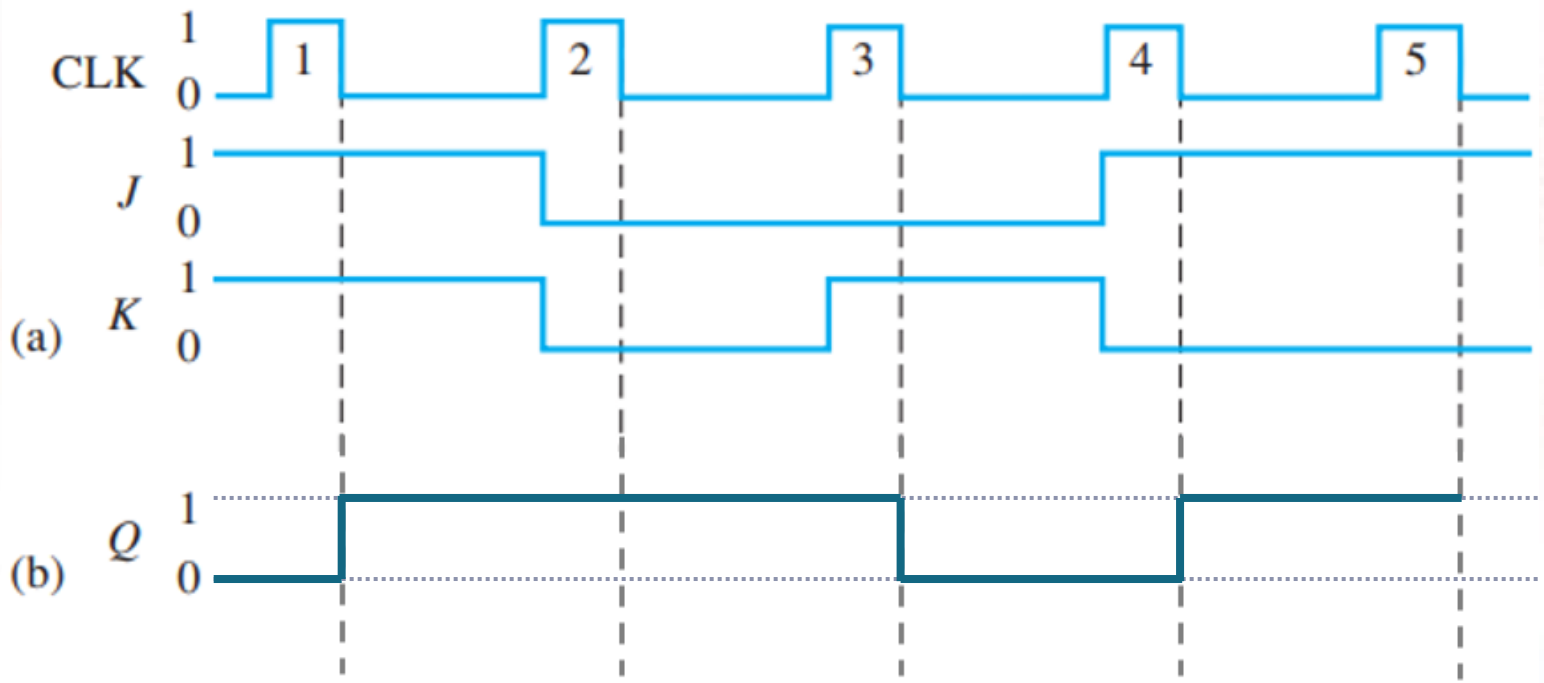

LABORATORY